09BWHC0454

Height (mm)	600
Light Source	4×4W
Selected Degree (°)θ1/2	80° x 37°
Input Voltage (V)	DC 24 AC 240
Operating Current (MA)	24V=791 240V=784
Consumption (W)	24V=19 240V=19
Luminance (LM)	WW=900
IK	05

Linear Drawing

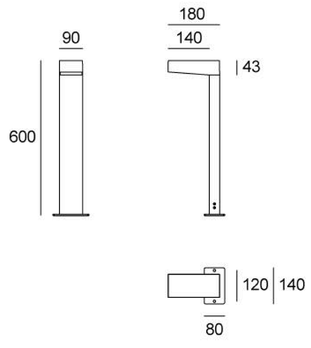

Unit: mm

Specification

Housing	12# Die-casting aluminum with powder painting T=60-80μm. Adhesion of ISO class 1/ASTM class 4B
Light Window	PC
Gasket	Silicon Robber Molding Sharped Seal
LED Type	SMD
Operating Temperature	-20˚C~40˚C
LED Driver	Built in on/off driver
Power cable	Outside of luminaire (Without waterstopper) 240V: H05RN-F 3×1.0mm², L=0.5m

Painting Color

Primary

Sanded Black
RAL 9005

Secondary

Sanded Dark Grey
KAP 7037

Sanded Bronze
KAP 7008

Base Options

Screw Base	Inground Base (Option)
	JC3020 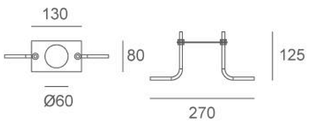
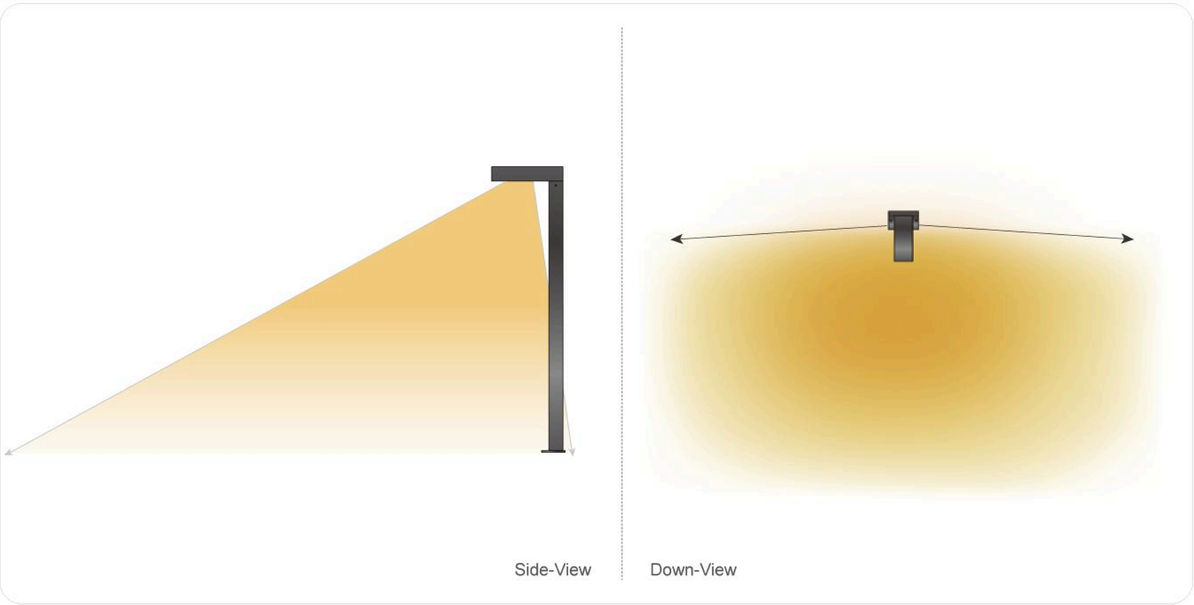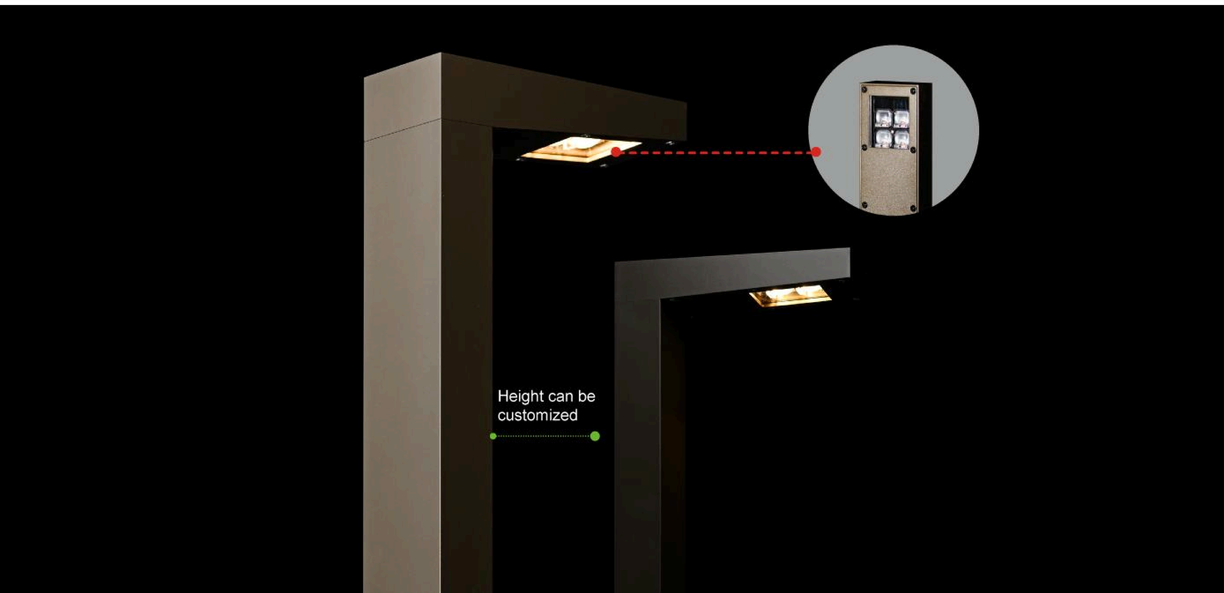
Beam Demo