07GQB0656 (ONE SIDE)

Light Source	6x1W
Selected Degree (°)θ1/2	40°
Input Voltage (V)	DC 24 AC 240
Operating Current (MA)	24V=270 240V=37
Consumption (W)	24V=6.5 240V=8
Luminance (LM)	WW=618
IK	07

Linear Drawing

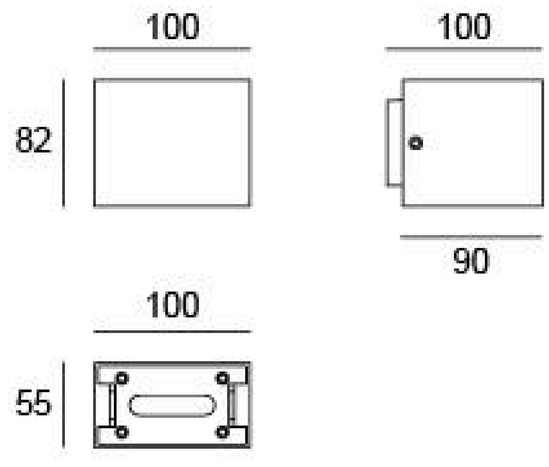

Unit: mm

Specification

Housing	12# Die-casting aluminum powder Painting. T=60-80μm.Adhesion of ISO class 1/ASTM class 4B
Light Window	UVstop & Fireproof PC T=3mm
Gasket	Waterproof silicone gasket
LED Type	SMD
Driver	Built in on/off driver
Operating Temperature	-20˚C~40˚C
Power Cable	Outside of luminaire (Without waterstopper) 24V: H05RN-F 2×1.0mm², L=0.3m 240V: H05RN-F 3×1.0mm², L=0.3m
Dimming Support	External DALI supported TRIAC,0-10V, PWM via external driver on request

Lens (Item Code) Referenced Degree(°)θ1/2

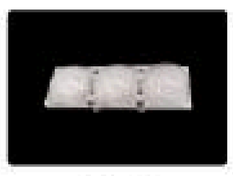

B116 40°

Painting Color

Primary

Sanded Dark Grey
KAP 7037

Secondary

Sanded Black
RAL 9005

Sanded Bronze
KAP 7008

Sanded White
RAL 9003

Diagram of Instruction

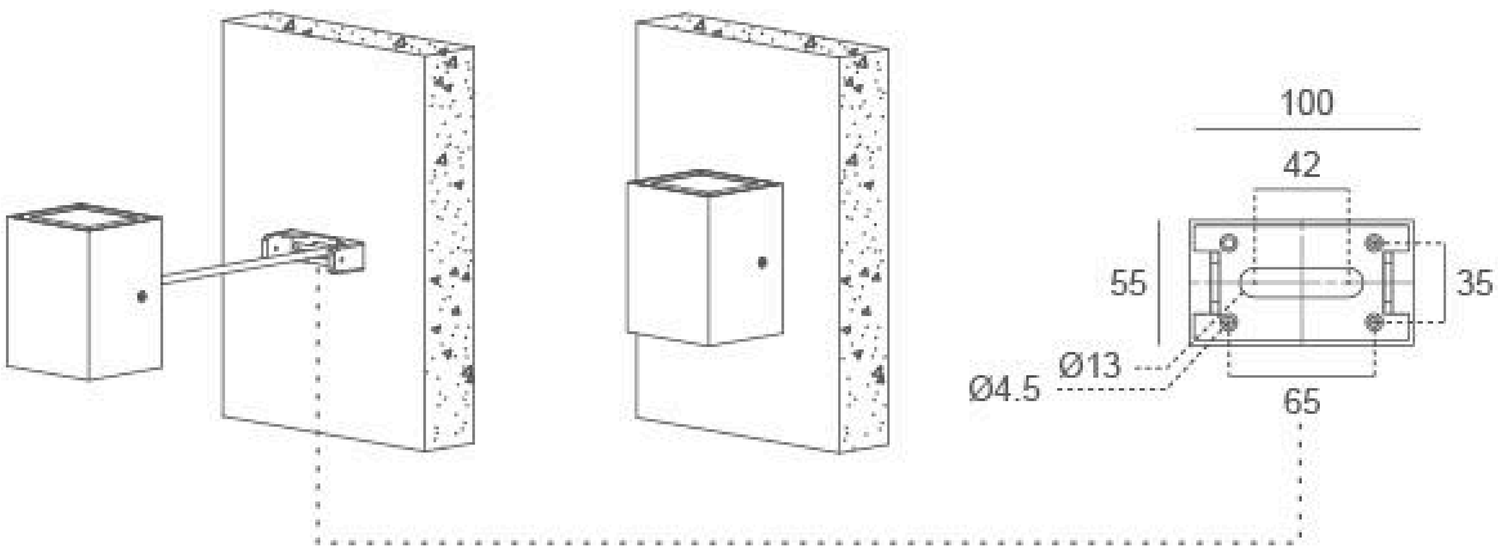

Photometirc

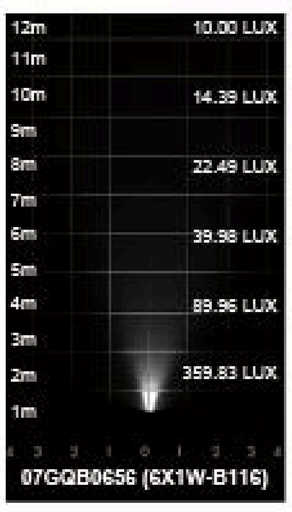

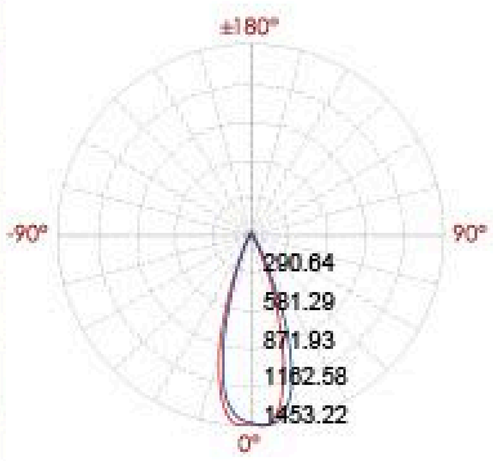

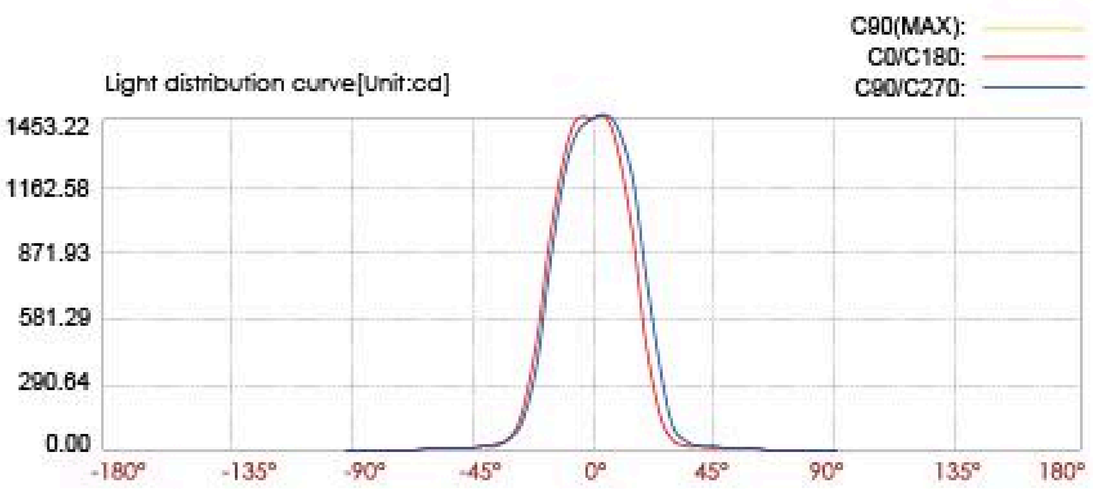

Lux distance curve

Illuminance at a distance

	Center beam LUX	Beam width V	Beam width H
2m	359.83 LUX	1.2m	1.3m
4m	89.96 LUX	2.5m	2.6m
6m	39.98 LUX	3.7m	3.9m
8m	22.49 LUX	4.7m	5.3m
10m	14.39 LUX	6.1m	6.6m
12m	10.00 LUX	7.4m	7.9m

Ver.Spread:34.1 Horiz.Spread:36.4