07FEED0656

Light Source	6x1W
Lens	N/A
Selected Degree (°)θ1/2	65°×82°
Input Voltage (V)	DC 24 AC 240
Operating Current (MA)	24V=333 240V=37
Consumption (W)	24V/240V=8
Luminance (LM)	WW=442
IK	03

Linear Drawing

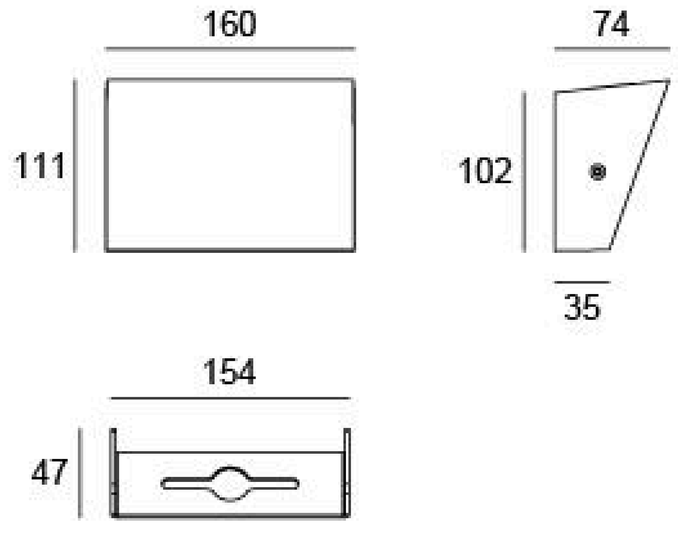

Unit: mm

Specification

Housing	12# Die-casting aluminum finishing or powder painting T=60-80μm. Adhesion of ISO class 1/ASTM class 4B
Light Window	Tempered frosted glass T=3mm
Driver	Built in on/off driver
LED Type	SMD
Operating Temperature	-20°C-40°C
Power Cable	Outside of luminaire (Without waterstopper) 24V: H05RN-F 2×1.0mm², L=0.3m 240V: H05RN-F 3×1.0mm², L=0.3m
Dimming Support	External DALI supported TRIAC,0-10V, PWM via external driver on request

Painting Color

Primary

Sanded Dark Grey
KAP 7037

Secondary

Sanded Black
RAL 9005

Sanded Bronze
KAP 7008

Sanded White
RAL 9003

Diagram of Instruction

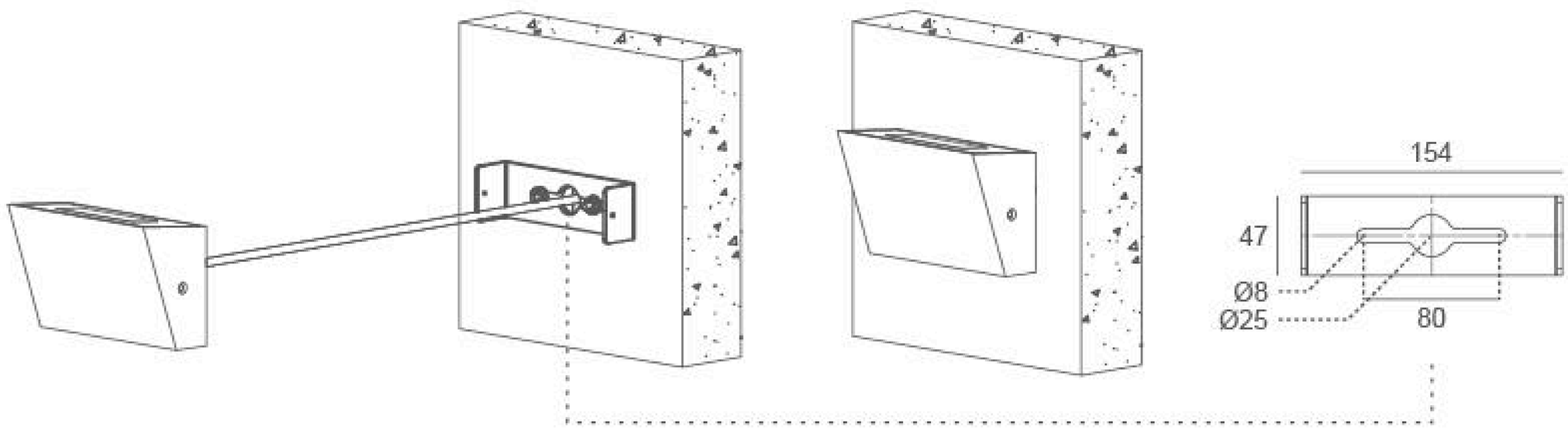

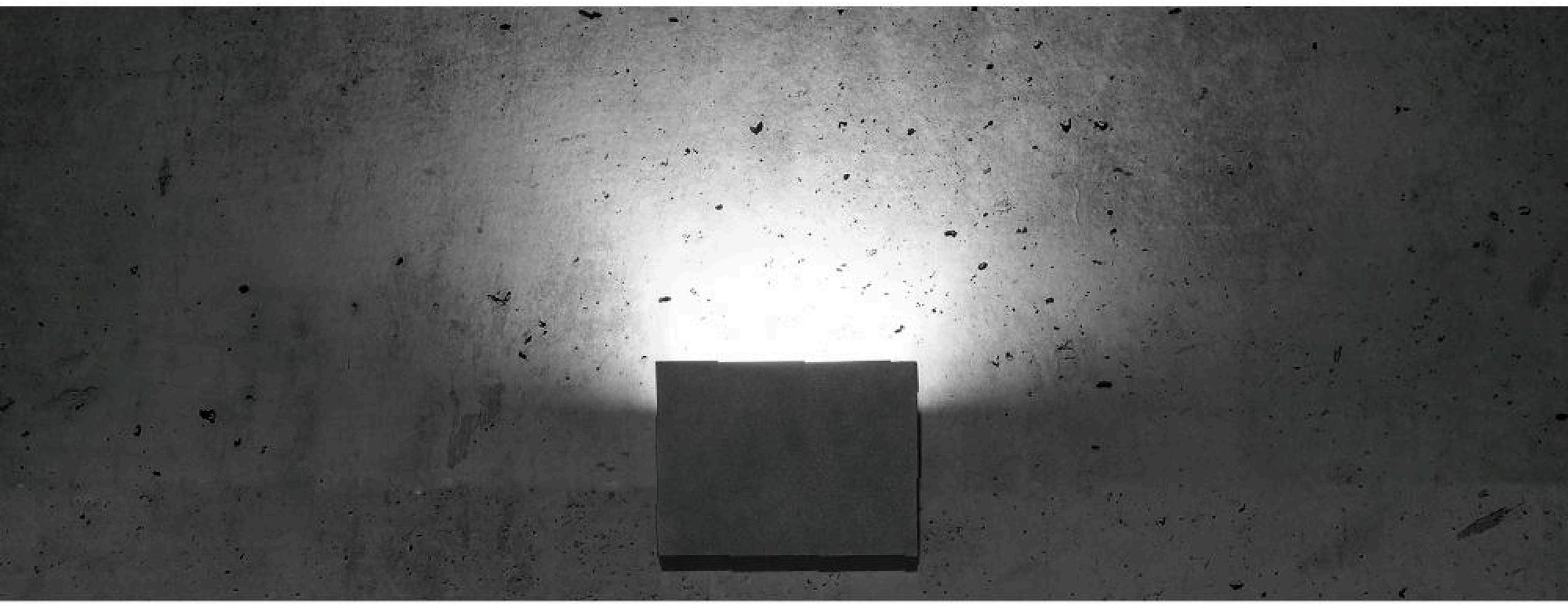

Photometirc

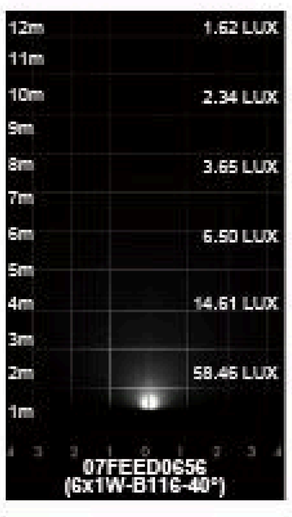

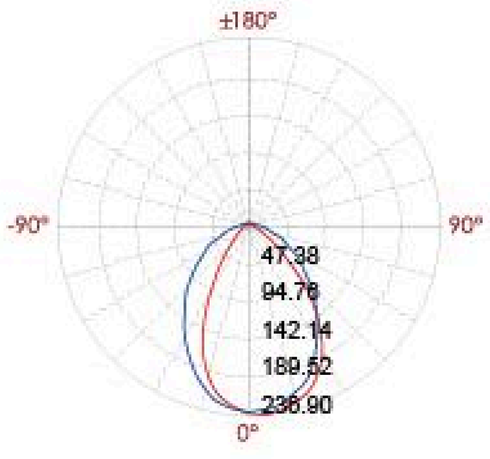

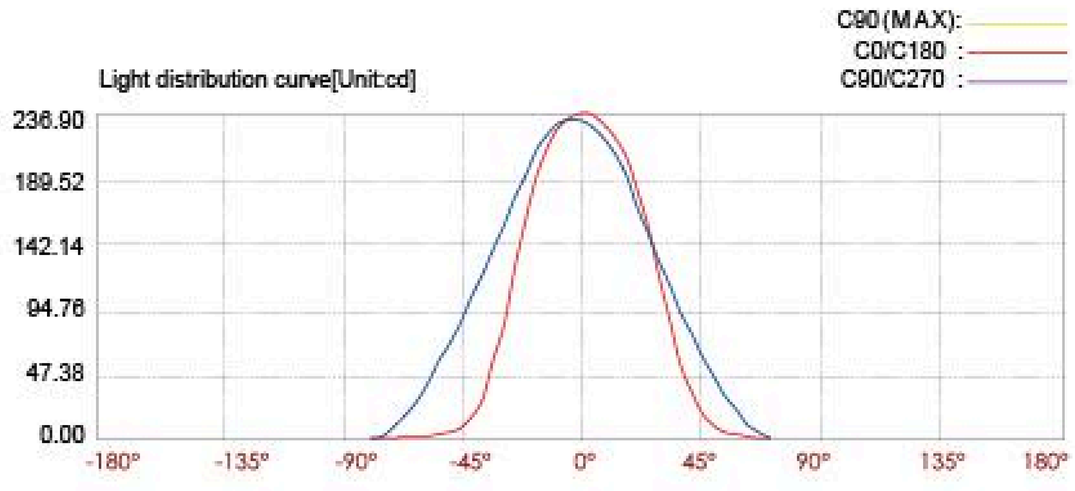

Lux distance curve

Illuminance at a distance

Center beam LUX		Beam width V	Beam width H
2m	58.46 LUX	2.6m	3.5m
4m	14.61 LUX	5.2m	7.1m
6m	6.50 LUX	7.7m	10.6m
8m	3.65 LUX	10.3m	14.2m
10m	2.34 LUX	12.9m	17.7m
12m	1.62 LUX	15.5m	21.3m

Ver.Spread:65.7 Horiz.Spread:83.2