07DBE1ED0856 (ONE SIDE)

Light Source	8x1W
Selected Degree (°)θ1/2	95° x 65°
Input Voltage (V)	AC 240
Operating Current (MA)	240V=50
Consumption (W)	240V=10.3
Luminance (LM)	WW=500
IK	01

Linear Drawing

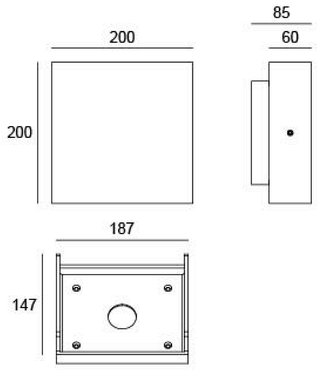

Unit: mm

Specification

Housing	12# Die-casting aluminum powder painting T=60-80μm.Adhesion of ISO class 1/ASTM class 4B
Glass	Tempered frosted glass T=3mm
Gasket	Waterproof silicone gasket
Driver	Built in on/off driver
LED Type	SMD
Operating Temperature	-20°C-40°C
Power Cable	Outside of luminaire (Without waterstopper) 240V: H05RN-F 3×1.0mm², L=0.3m
Dimming Support	External DALI supported TRIAC,0-10V, PWM via external driver on request

Painting Color

Primary

Sanded Dark Grey
KAP 7037

Secondary

Sanded Black
RAL 9005

Smoke Grey
KAP 7043

Sanded Bronze
KAP 7008

Sanded White
RAL 9003

Diagram of Instruction

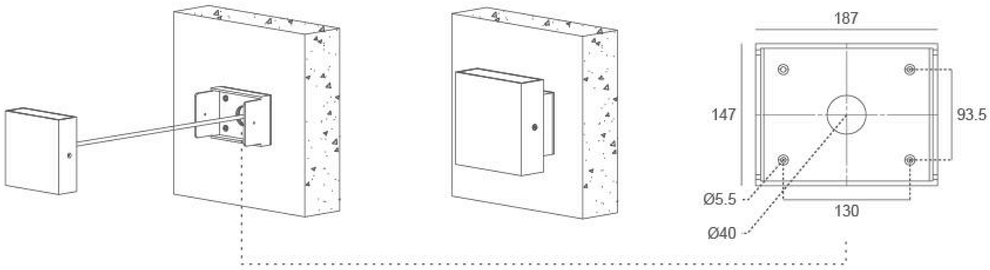

Photometirc

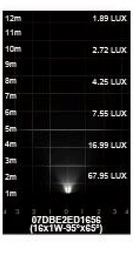

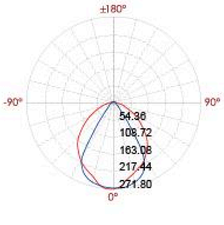

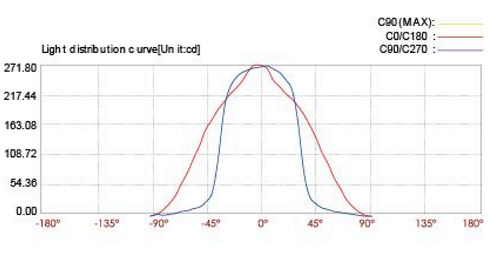

Lux distance curve

Illuminance at a distance

	Center beam LUX	Beam width V	Beam width H
2m	67.95 LUX	4.3m	2.6m
4m	16.99 LUX	8.7m	5.1m
6m	7.55 LUX	13.0m	7.7m
8m	4.25 LUX	17.3m	10.3m
10m	2.72 LUX	21.6m	12.9m
12m	1.89 LUX	26.0m	15.4m

Ver.Spread:94.5 Horiz.Spread:65.5