## 07BJD0125

| | |
|---|---|
| Light Source | 1x4.5W |
| Lens | N / A |
| Selected Degree (°)θ1/2 | 360° |
| Input Voltage (V) | DC 24 AC 240 |
| Operating Current (MA) | 24V=230 240V=29 |
| Consumption (W) | 24V=5.5 240V=6 |
| Luminance (LM) | 240V=447 |
| IK | 08 |

## Linear Drawing

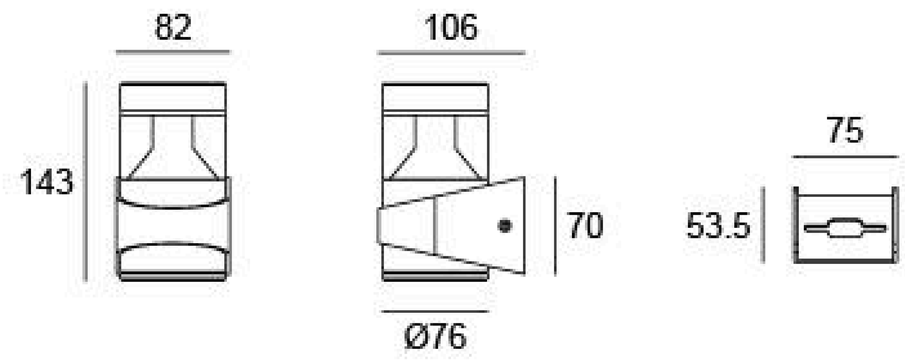


Unit: mm

## Specification

| | |
|---|---|
| Housing | 12# Die-casting aluminum finishing or powder Painting T=60-80μm. Adhesion of ISO class 1/ASTM class 4B |
| Light Window | PMMA |
| LED Type | COB |
| Driver | Built in on/off driver |
| Operating Temperature | -20˚C~40˚C |
| Power Cable | Outside of luminaire (Without waterstopper)<br>24V: H05RN-F 2×1.0mm², L=0.3m<br>240V: H05RN-F 3×1.0mm², L=0.3m |

## Painting Color

Primary

Sanded Black
**RAL 9005**

Sanded Bronze
**KAP 7008**

## Features

Made of PMMA
integrally formed and finished.

## Diagram of Instruction

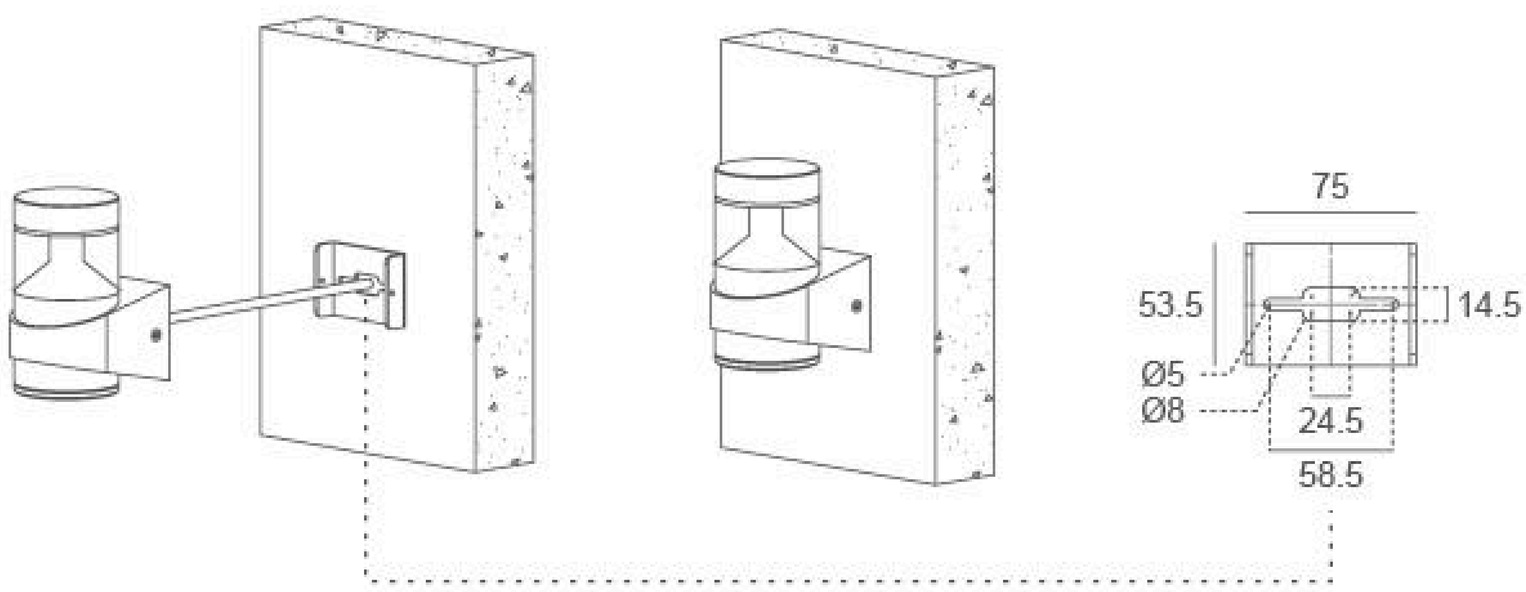


## Photometirc

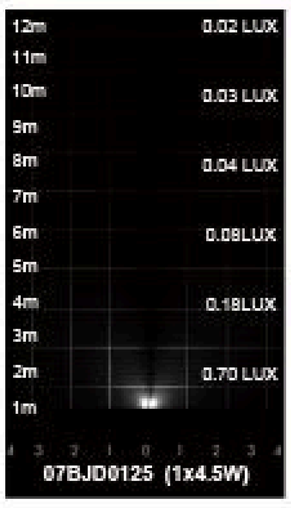


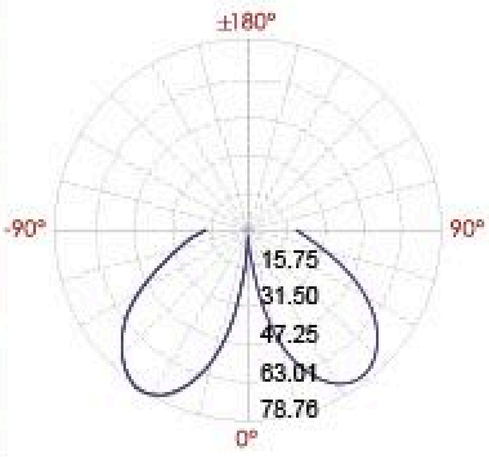


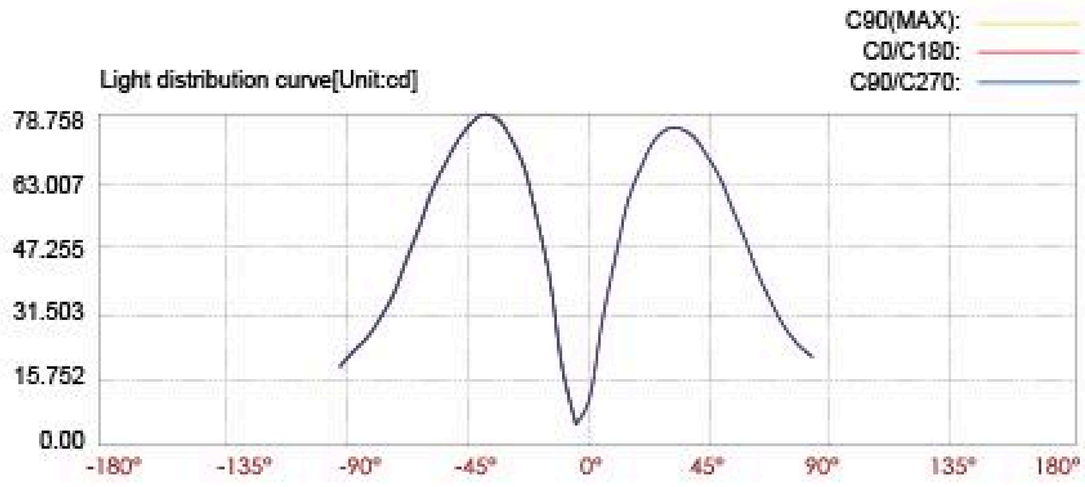


Lux distance curve

Illuminance at a distance

| Center beam LUX | | Beam width V | Beam width H |
|---|---|---|---|
| 2m | 0.70 LUX | 1037.4m | 1036.2m |
| 4m | 0.18 LUX | 2074.9m | 2072.4m |
| 6m | 0.08 LUX | 3112.3m | 3108.5m |
| 8m | 0.04 LUX | 4149.7m | 4144.7m |
| 10m | 0.03 LUX | 5187.2m | 5180.9m |
| 12m | 0.02 LUX | 6224.6m | 6217.1m |

Ver.Spread:179.6 Horiz.Spread:179.6