07BDD0125

Light Source	1x4.5W
Lens	N / A
Selected Degree (°)θ1/2	360°
Input Voltage (V)	DC 24 AC 240
Operating Current (MA)	24V=230 240V=29
Consumption (W)	24V=5.5 240V=6
Luminance (LM)	240V=409
IK	08

Linear Drawing

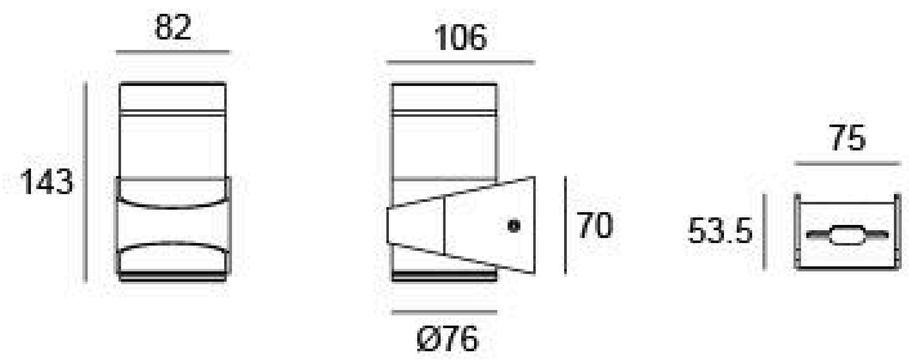

Unit: mm

Specification

Housing	12# Die-casting aluminum finishing or powder Painting T=60-80μm. Adhesion of ISO class 1/ASTM class 4B
Light Window	PMMA
LED Type	COB
Driver	Built in on/off driver
Operating Temperature	-20°C~40°C
Power Cable	Outside of luminaire (Without waterstopper) 24V: H05RN-F 2×1.0mm², L=0.3m 240V: H05RN-F 3×1.0mm², L=0.3m

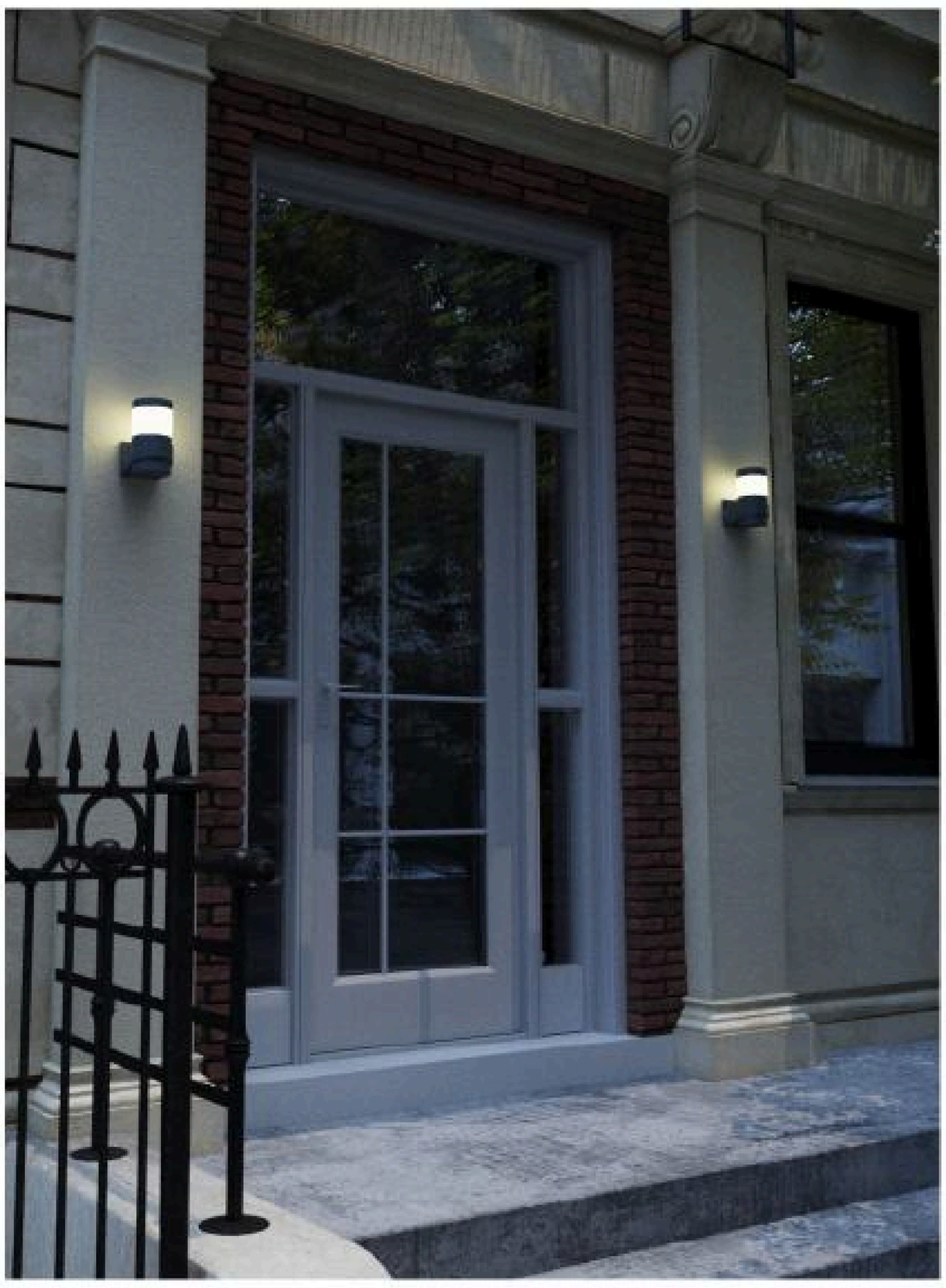

Painting Color

Primary

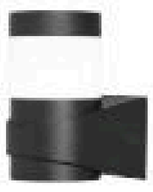

Sanded Black
RAL 9005

Sanded Bronze
KAP 7008

Diagram of Instruction

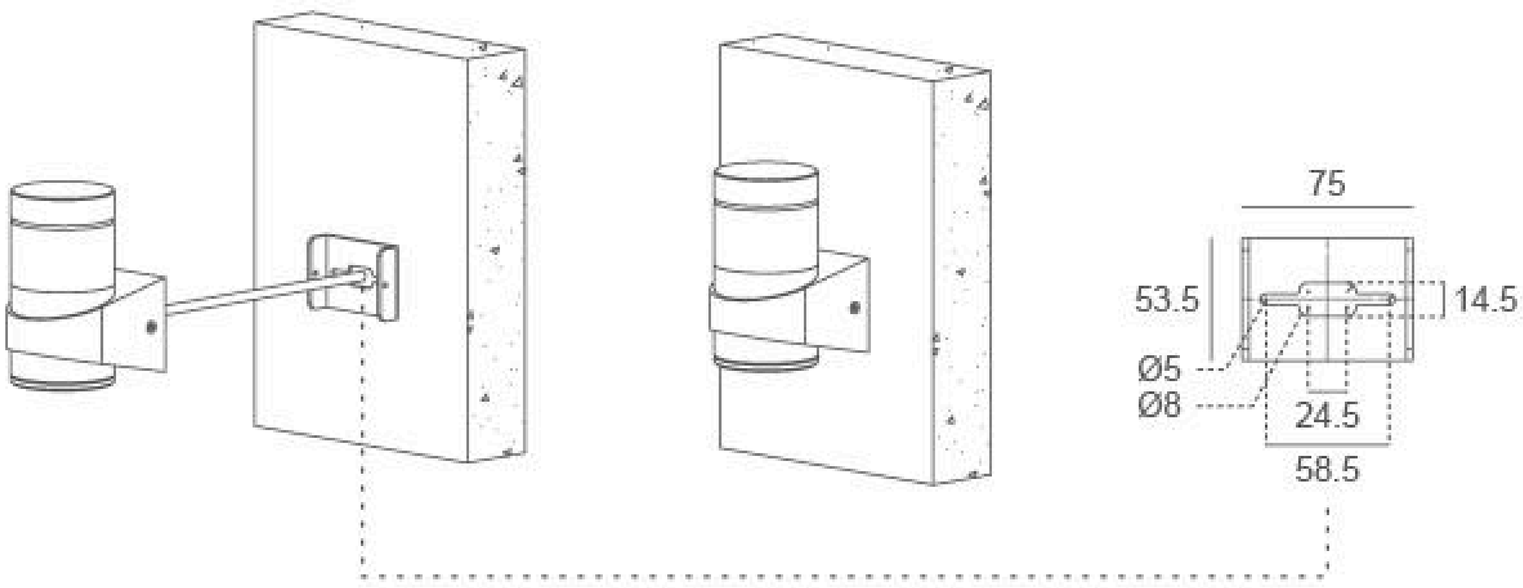

Photometirc

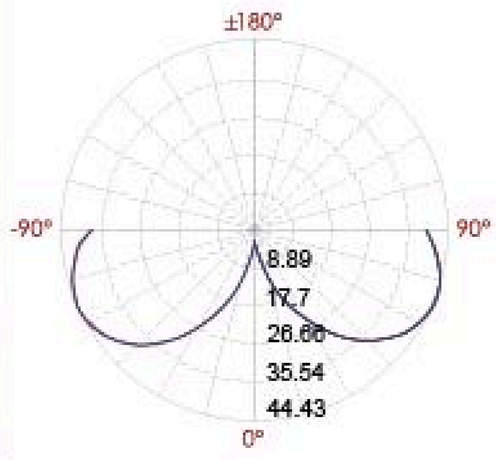

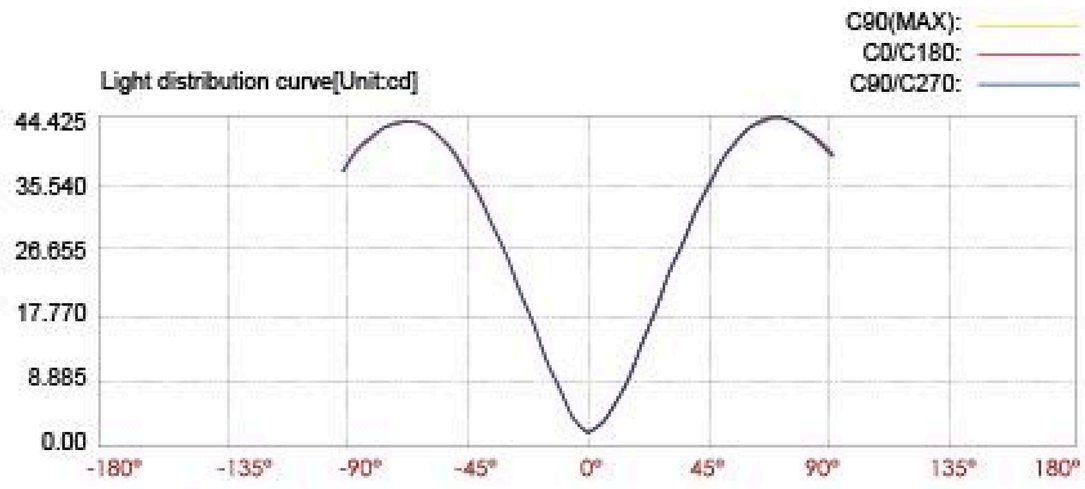

Lux distance curve

Illuminance at a distance

	Center beam LUX	Beam width V	Beam width H
2m	0.62 LUX	1840.7m	1836.0m
4m	0.16 LUX	3681.3m	3672.0m
6m	0.07 LUX	5522.0m	5508.1m
8m	0.04 LUX	7362.6m	7344.1m
10m	0.02 LUX	9203.3m	9180.1m
12m	0.02 LUX	11043.9m	11016.1m

Ver.Spread:179.8 Horiz.Spread:179.8